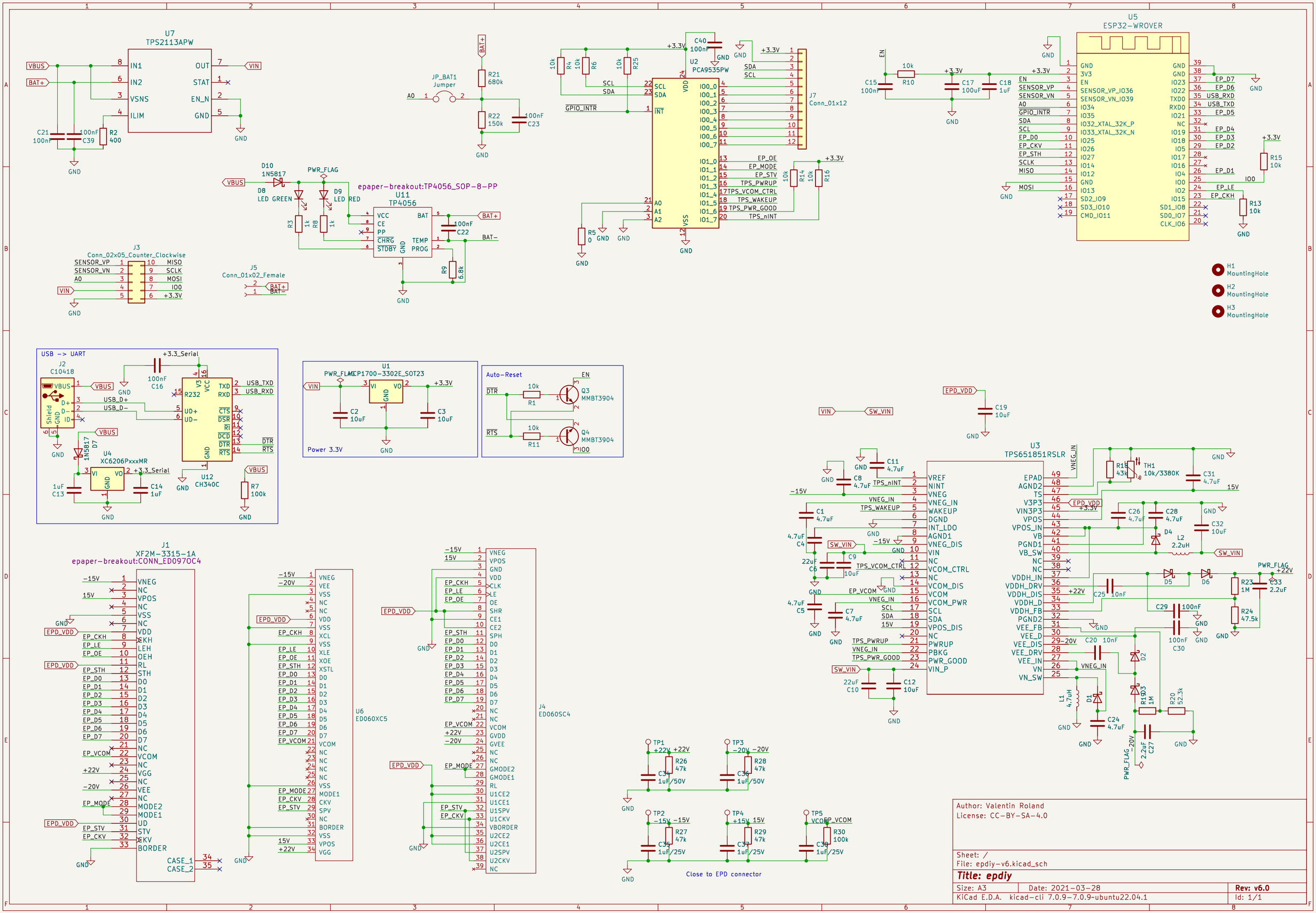
U7
TPS2113APW
U5
ESP32-WROVER
U2
PCA9535PW
J7
Conn_01x12
U11
TP4056
epaper-breakout:TP4056_SOP-8-PP
J3
Conn_02x05_Counter_Clockwise
J5
Conn_01x02_Female
H1
MountingHole
H2
MountingHole
H3
MountingHole
USB -> UART
J2
C10418
U4
XC6206PxxxMR
U12
CH340C
U1
PWR_FLAG
MCP1700-3302E_SOT23
Power 3.3V
Auto-Reset
Q3
MMBT3904
Q4
MMBT3904
U3
TPS651851RSLR
J1
XF2M-3315-1A
epaper-breakout:CONN_ED097OC4
U6
ED060XC5
J4
ED060SC4
Close to EPD connector
Author: Valentin Roland
License: CC-BY-SA-4.0
Sheet: /
File: epdiy-v6.kicad_sch
Title: epdiy
Size: A3
Date: 2021-03-28
Rev: v6.0
KiCad E.D.A. kicad-cli 7.0.9-7.0.9~ubuntu22.04.1
Id: 1/1